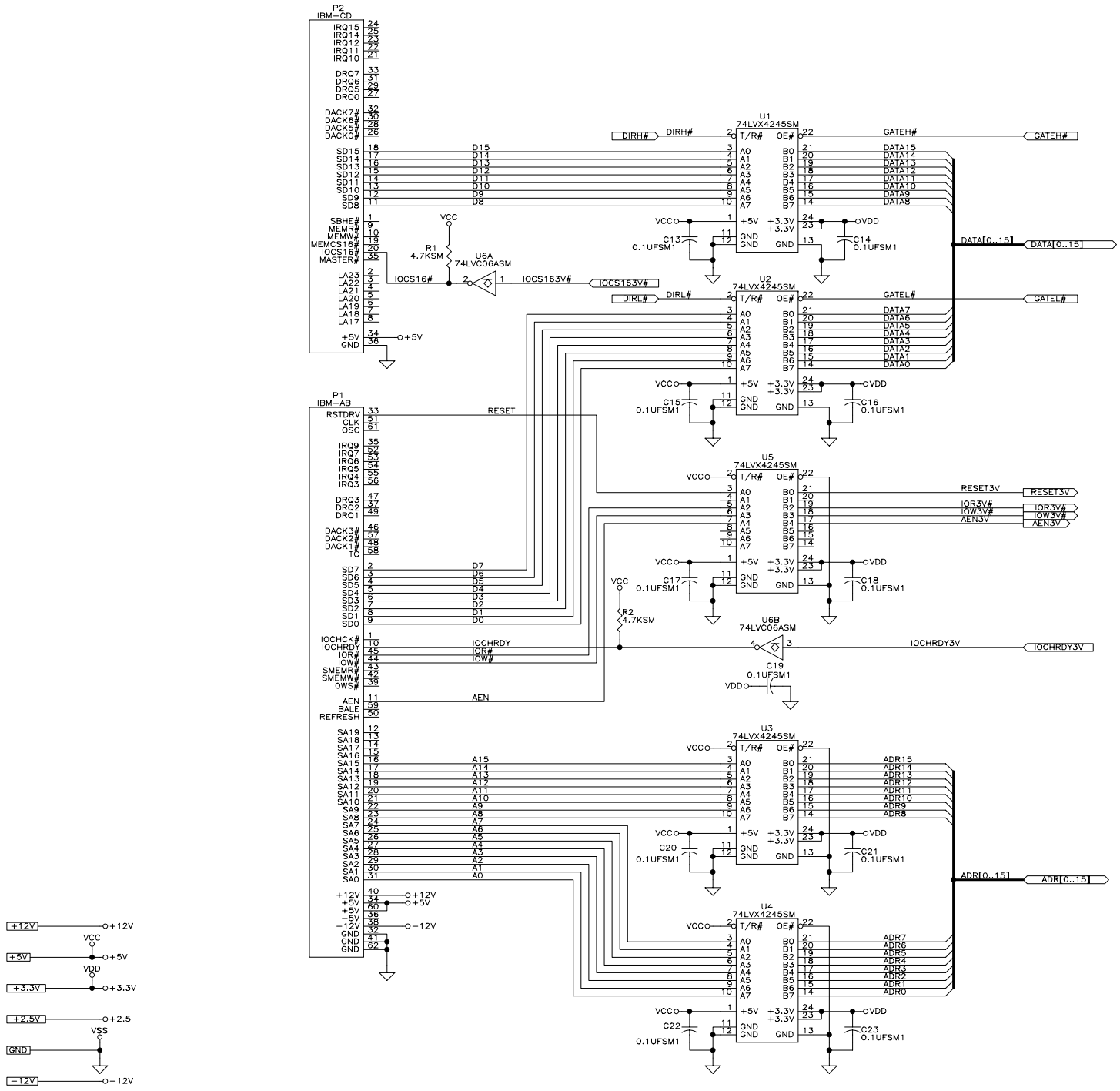

100649 REV 001

SCIENCE ENGINEERING ASSOCIATES, INC.
114C MANSFIELD HOLLOW ROAD
MANSFIELD CENTER, CT 06250
Phone: 1-860-450-1717
Fax: 1-860-450-1707

Title	INS429H BUS LOGIC	
Size C	Document Number 100648	Rev A
Date 28-Apr-2008	Sheet 2 of 4	